REVISIONS			
REV.	DESCRIPTION	DATE	APPROVED

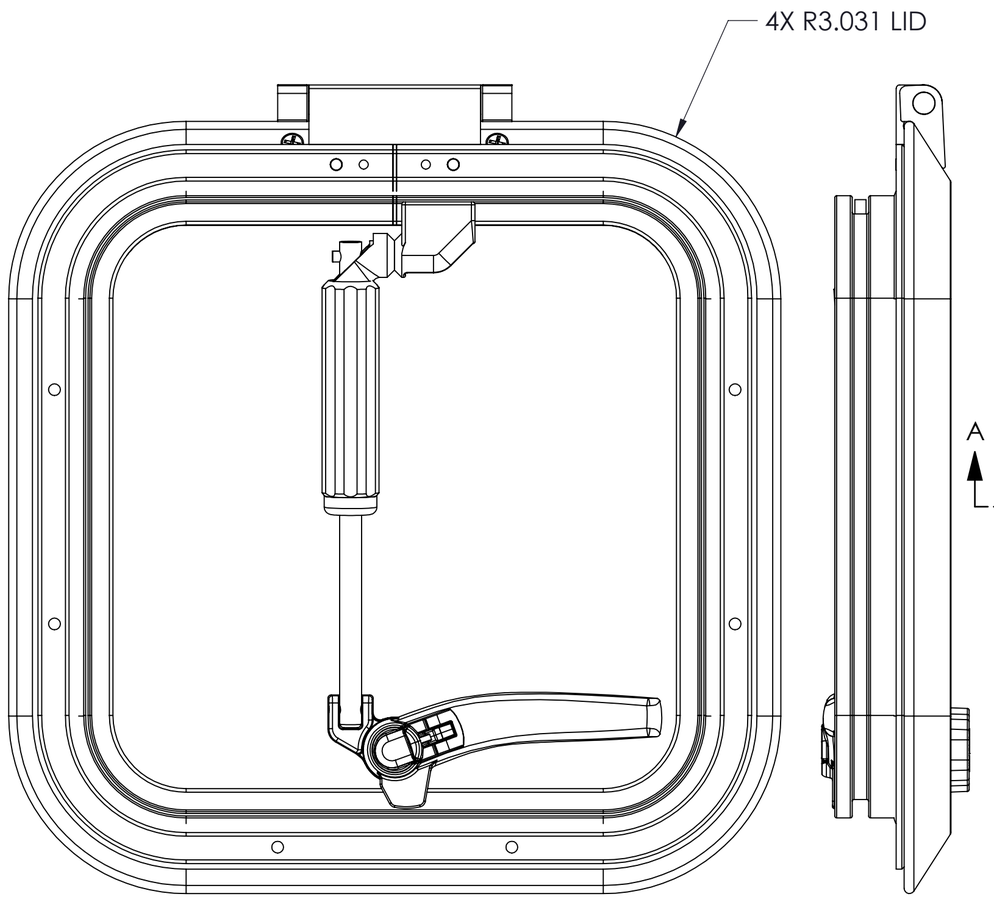

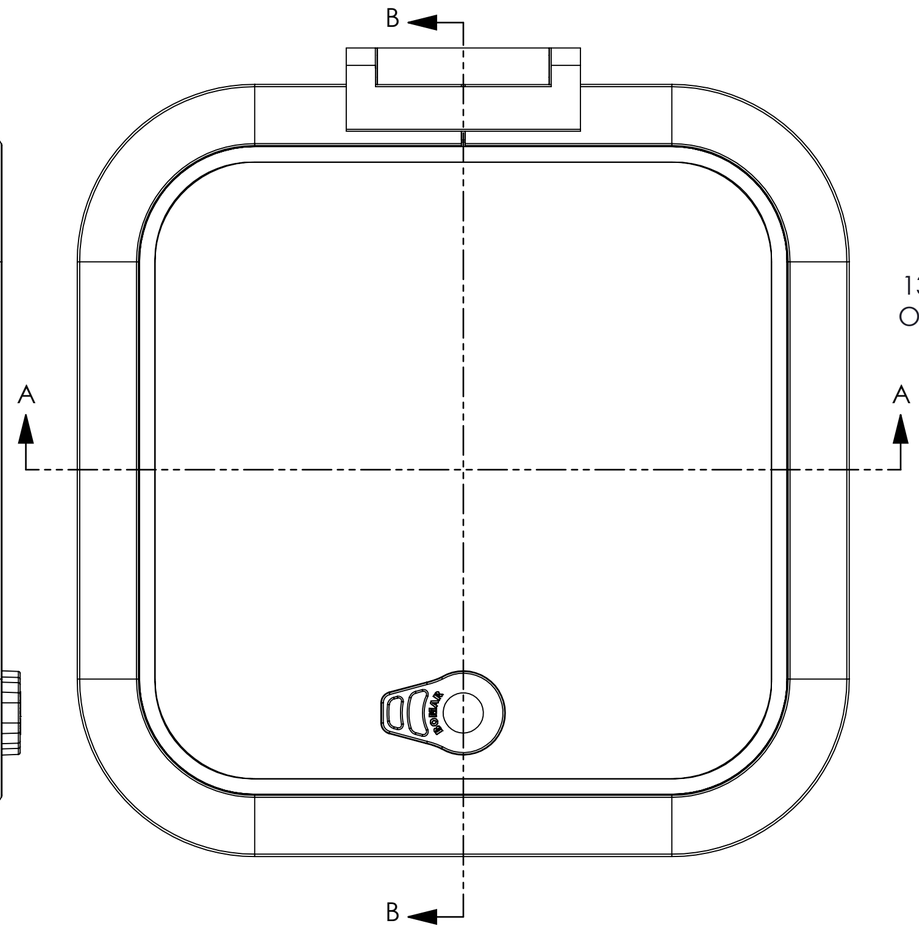

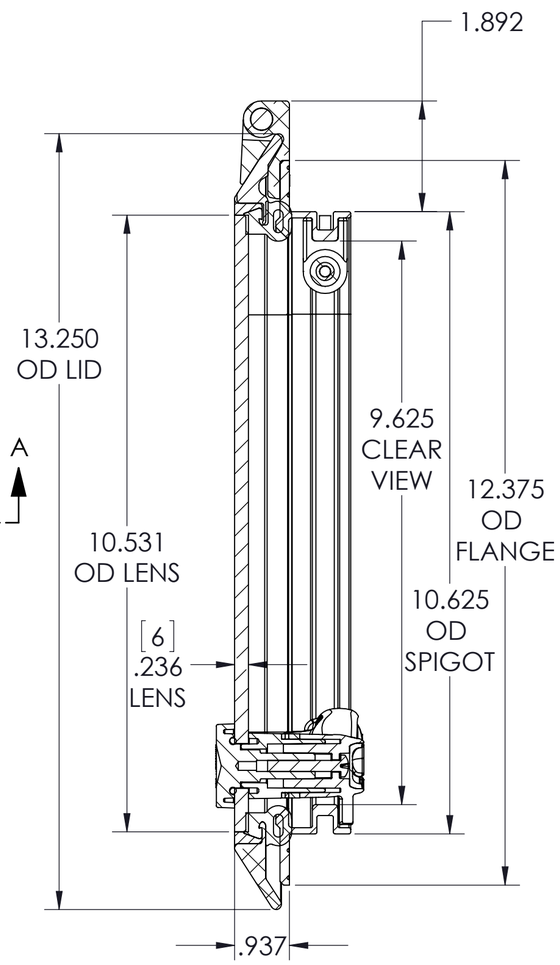

SECTION B-B

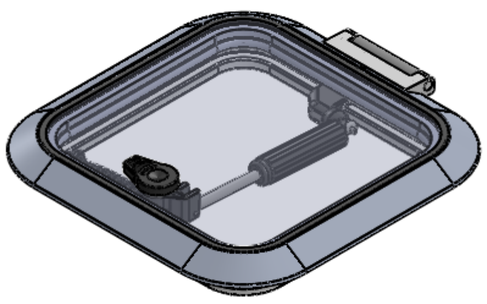

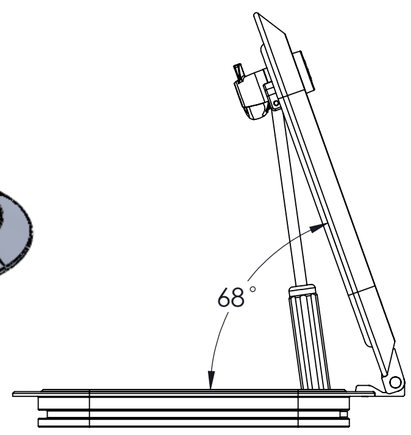

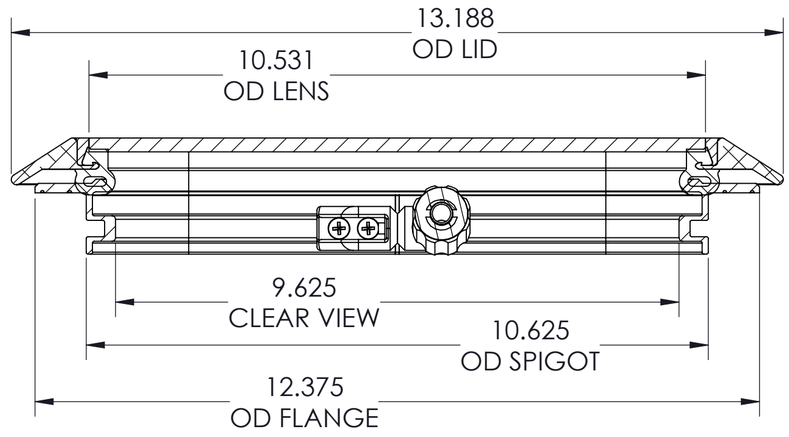

SECTION A-A

NOTE:
SUGGESTED CUTOUT = 10-3/4 X 10-3/4
CUTOUT RADIUS = 1-11/16 RADIUS

THIS DRAWING IS THE PROPERTY OF POMPANETTE, LLC., CHARLESTOWN, N.H. ALL RIGHTS ARE RESERVED, THIS DRAWING AND INFORMATION MAY NOT BE COPIED OR DISCLOSED TO OTHERS WITHOUT WRITTEN PERMISSION OF POMPANETTE, LLC.

DIV. OF Pompanette INC.
73 SOUTHWEST ST. PO BOX 1200
CHARLESTOWN, N.H. 03603
PH. (603) 826 5791
FAX (603) 826 3074

TOLS. FRACT. ±1/64	TITLE: LOW PRO HATCH ASSEMBLY WITH 'A' TOP		
DEC: .XXX = ±.005 .XX = ±.01	MATL.: SEE BOM	DRAWN BY: JPERRY	1 OF 1
DEG. ±1°	SCALE 1:2 / SIZE © / DATE 1/2/13	PART NO. N1000-10A	

S:\Bomar\Dept-Hatch\1000\A-Top Low Pro Hatch Assy